Always there to help you

Register your product and get support at
www.philips.com/welcome

Question? Contact Philips

AE5020

User manual

PHILIPS

Contents

1 Important 2
Safety 2
Notice 2

2 Your FM/DAB radio 4
Introduction 4
About DAB 4
What's in the box 4
Overview of the main unit 5

3 Get started 6
Prepare FM/DAB antenna 6
Connect power 6
Turn on 7
Adjust the volume level 7

4 Listen to radio 8
Listen to DAB radio 8
Listen to FM radio 9
Use system menu in FM/DAB mode 10

5 Product information 12
Amplifier 12
Tuner 12
General information 12

6 Troubleshooting 13

1 Important

Safety

Important Safety Instructions

1. Read these instructions.
2. Keep these instructions.
3. Heed all warnings.
4. Follow all instructions.
5. Do not use this apparatus near water.
6. Clean only with dry cloth.
7. Do not block any ventilation openings. Install in accordance with the manufacturer's instructions.
8. Do not install near any heat sources such as radiators, heat registers, stoves, or other apparatus (including amplifiers) that produce heat.
9. Protect the power cord from being walked on or pinched, particularly at plugs, convenience receptacles, and the point where they exit from the apparatus.
10. Only use attachments/accessories specified by the manufacturer.
11. Unplug this apparatus during lightning storms or when unused for long periods of time.
12. Refer all servicing to qualified service personnel. Servicing is required when the apparatus has been damaged in any way, such as power-supply cord or plug is damaged, liquid has been spilled or objects have fallen into the apparatus, the apparatus has been exposed to rain or moisture, does not operate normally, or has been dropped.
13. Battery usage CAUTION – To prevent battery leakage which may result in bodily injury, property damage, or damage to the unit:
    - Install all batteries correctly, + and - as marked on the unit.
    - Do not mix batteries (old and new or carbon and alkaline, etc.).
    - Remove batteries when the unit is not used for a long time.
14. Apparatus shall not be exposed to dripping or splashing.
15. Do not place any sources of danger on the apparatus (e.g. liquid filled objects, lighted candles).
16. Use only power supplies listed in the user manual.
17. Where the plug of the Direct Plug-in Adapter is used as the disconnect device, the disconnect device shall remain readily operable.

Warning

- Never remove the casing of this unit.
- Never lubricate any part of this unit.
- Place this unit on a flat, hard and stable surface.
- Never place this unit on other electrical equipment.
- Only use this unit indoors. Keep this unit away from water, moisture and liquid-filled objects.
- Keep this unit away from direct sunlight, naked flames or heat.

Notice

CE

This product complies with the radio interference requirements of the European Community.

Any changes or modifications made to this device that are not expressly approved by

WOOX Innovations may void the user's authority to operate the equipment.

Your product is designed and manufactured with high quality materials and components, which can be recycled and reused.

When this crossed-out wheeled bin symbol is attached to a product it means that the product is covered by the European Directive 2002/96/EC.

Please inform yourself about the local separate collection system for electrical and electronic products.

Please act according to your local rules and do not dispose of your old products with your normal household waste. Correct disposal of your old product helps to prevent potential negative consequences for the environment and human health.

Your product contains batteries covered by the European Directive 2006/66/EC, which cannot be disposed with normal household waste.Please inform yourself about the local rules on separate collection of batteries because correct disposal helps to prevent negative consequences for the environmental and human health.

Environmental information

All unnecessary packaging has been omitted. We have tried to make the packaging easy to separate into three materials: cardboard (box), polystyrene foam (buffer) and polyethylene (bags, protective foam sheet.)

Your system consists of materials which can be recycled and reused if disassembled by a specialized company. Please observe the local regulations regarding the disposal of packaging materials, exhausted batteries and old equipment.

Note

- The type plate is located on the back of the unit.

2 Your FM/DAB radio

Congratulations on your purchase, and welcome to Philips! To fully benefit from the support that Philips offers, register your product at www.philips.com/welcome.

Introduction

With this unit, you can enjoy both FM radio and Digital Audio Broadcasting (DAB) radio.

About DAB

About Digital Audio Broadcasting (DAB)

DAB digital radio is a new way of broadcasting radio via a network of terrestrial transmitters. It provides listeners with more choice and information delivered in crystal clear, crackle-free sound quality.

– The technology allows the receiver to lock on to the strongest signal it can find.

– With DAB digital stations there are no frequencies to remember, and sets are tuned by station name, so there's no returning on the move.

What is a multiplex?

Digital radio operation is made up of a single block of frequencies called a multiplex. Each multiplex works within a frequency spectrum, such as Band III for DAB broadcasts.

DAB BROADCASTERS AND DLS

Each DAB broadcaster (or multiplex operator) also provides text and audio data services. Some programmes are supported by Dynamic Label Segments (DLS). This is data which you can read as scrolling text on your DAB radio display. Some stations transmit the latest news, travel, and weather, what's on now and next, website addresses and phone numbers.

For more information on digital radio coverage and services, please visit: www.drdb.org.

What's in the box

Check and identify the contents of your package:

- Main unit
- AC power adapter
- Short user manual

Overview of the main unit

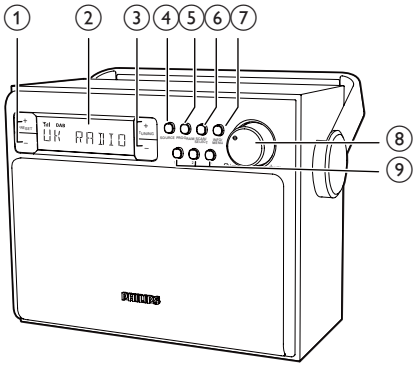

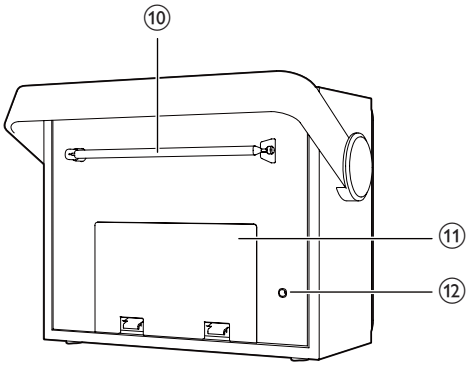

① PRESET +/-
- Select a preset radio station

② Display panel
- Display the current status.

③ TUNING +/-
- Tune to a FM station.
- Navigate a DAB station list.
- Navigate an FM/DAB menu.

④ SOURCE
- Select a sound source: DAB or FM radio.

⑤ PROGRAM
- Store radio stations manually.

⑥ SCAN/SELECT
- Scan/store radio stations automatically.
- Confirm DAB station selection.
- Confirm menu selection.

⑦ INFO/MENU
- Display DAB/RDS station information.
- (Press and hold) enter the DAB menu.

⑧ ⏻ /VOL +/-
- Turn on or off the unit.
- Adjust volume.

⑨ Preset 1, 2, 3
- Store/directly access preset 1, 2, or 3.

⑩ FM/DAB antenna
- Improve FM/DAB reception.

⑪ Battery compartment door

⑫ DC input socket
- Connect power through the supplied AC/DC adapter.

3 Get started

Caution

- Use of controls or adjustments or performance of procedures other than herein may result in hazardous radiation exposure or other unsafe operation.

Always follow the instructions in this chapter in sequence.

If you contact Philips, you will be asked for the model and serial number of this apparatus. The model number and serial number are on the back of the apparatus. Write the numbers here:

Model No. _____

Serial No. _____

Prepare FM/DAB antenna

For optimal reception, fully extend and adjust the position of the FM/DAB antenna.

Tip

- Position the antenna as far away as possible from your TV, VCR or other radiation source to prevent interference.

Connect power

You can use this radio player on AC power or battery power.

Battery Life (Approx. hours)

When using	FM	DAB
R14 (size C)	25	25

Option 1: AC power

Caution

- Risk of product damage! Make sure that the power supply voltage corresponds to the voltage printed on the back or the underside of the product.
- Risk of electric shock! When you unplug the AC adapter, always pull the plug from the socket. Never pull the cord.
- Use only the AC adapter specified by the manufacturer or sold with this unit.

Note

- The type plate is located on the back of the unit.

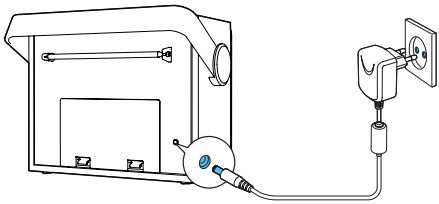

1. Connect one end of the AC adapter to the DC input socket on the main unit.
2. Connect the other end of the AC adapter to the wall outlet.

Option 2: Battery power

Caution

- Batteries (battery pack or batteries installed) shall not be exposed to excessive heat such as sunshine, fire or the like.
- Danger of explosion if battery is incorrectly replaced. Replace only with the same equivalent type.
- Do not mix batteries (old and new or carbon and alkaline, etc.).
- Remove batteries if they are exhausted or if the unit is not to be used for a long time.

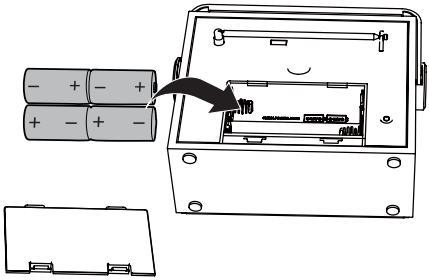

1 Open the battery compartment at the back of the unit.

2 Insert four R14/UM-2/C size batteries (not supplied) with correct polarity (+/-) as indicated, then close the battery compartment.
   ↳ The unit is ready to operate.

Caution

- A 'Battery low' message is shown when the battery power is low. Replace batteries or connect to AC power to ensure normal operation.

Note

- Batteries contain chemical substances, so they should be disposed of properly.

Turn on

- Rotate ⏻ /**VOL +/-** clockwise until you hear a click to turn on the unit.
   ↳ The unit switches to the last selected source.
   ↳ For first-time use, the unit shows a welcome message and switches to DAB mode to start automatic scanning for available DAB stations.

To turn off the unit:

- Rotate ⏻ /**VOL +/-** anticlockwise until you hear a click.

Adjust the volume level

- During radio broadcast, rotate ⏻ /**VOL +/-** clockwise/anticlockwise to increase/decrease the volume level.

4 Listen to radio

Listen to DAB radio

Tune to DAB radio stations

Note

- Make sure that the antenna is fulled extended.

1 Press **SOURCE** repeatedly to select DAB radio.
   ↳ **[Full SCAN]** (full scan) is displayed.

2 Press **SCAN/SELECT** to start full scan.
   ↳ The unit stores all the DAB radio stations automatically and then broadcasts the first available station.
   ↳ The station list is memorized in the unit. Next time when you turn on the unit, the station scan does not take place.
   ↳ If no DAB station is found, **[No DAB Station]** (no DAB station) appears, then **[FULL SCAN]** (full scan) is displayed.

To tune to a station from the available station list:

- In DAB mode, press **TUNING +/-** to navigate through the available DAB stations.

Store DAB radio stations automatically

Note

- New stations and services will be added in the DAB broadcast. To make new DAB stations and services available, perform full scan regularly.

- In DAB mode, press **SCAN/SELECT**.
   ↳ The unit scans all the available DAB radio stations and broadcasts the first available station.

Tip

- No DAB radio station is stored to presets during this process.

Store DAB radio stations manually

Note

- You can store a maximum of 20 preset DAB radio stations.

1 Tune to a DAB radio station.
2 Press **PROGRAM** to activate programming mode.
3 Press **PRESET +/-** repeatedly to select a preset number.
4 Press **PROGRAM** to confirm.
5 Repeat steps 1 to 4 to store other DAB stations.

Note

- At step 2, you can also press and hold preset key 1, 2 or 3 to save the current station to the corresponding position directly.
- To remove a preset DAB radio station, store another station in its place.

Select a preset DAB radio station

In DAB mode,

- to select a preset number 1 - 3, press the numeric key **1** - **3** directly;
- to select any preset number, press **PRESET +/-** repeatedly.

Show DAB information

- During DAB radio broadcast, press **INFO/MENU** repeatedly to scroll through the following information (if available):
  - ↳ Station name
  - ↳ Dynamic Label Segment (DLS)
  - ↳ Signal strength
  - ↳ Program type (PTY)
  - ↳ Ensemble Name
  - ↳ Channel and frequency
  - ↳ Signal error rate
  - ↳ Bit rate and audio status
  - ↳ Time
  - ↳ Date

Use DAB menu

1. In DAB mode, press and hold **INFO/MENU** to access the DAB menu.
2. Press **TUNING +/-** to scroll through the menu options:
   - **[Full scan]:** scan all the available DAB radio stations.
   - **[Manual tune]:** tune to a specific channel/frequency manually and add it to the station list.
   - **[Prune]:** Remove all the invalid stations from the station list.
   - **[DRC Options]:** add or remove a degree of compensation for the differences in the dynamic range between radio stations.
   - **[System]:** Adjust system settings.
3. To select an option, press **SCAN/SELECT**.
4. Repeat steps 2 - 3 if any sub-option is available under an option.

[System]

- **[Time]:** set time; select 24H or 12H mode; and set time synchronization.
- **[Factory Reset]:** reset all the settings to factory default.
- **[Software Upgrade]:** update software if available.
- **[SW version]:** know the software version of the unit.

Tip

- Select **[System]** > **[Time]** > **[Auto Sync]** > **[DAB]** to set time synchronization.The clock radio will synchronize time with DAB signal.

Note

- If no button is pressed within 10 seconds, the menu exits.

Listen to FM radio

Tune to FM radio

1. Press **SOURCE**repeatedly to select FM radio.
2. Press **TUNING +/-** to tune to a radio station.
3. Press and hold **TUNING +/-** to tune to the next strongest radio station.

Store FM radio stations automatically

Note

- You can store up to 20 FM radio stations.

- In FM tuner mode, press **SCAN/SELECT**.
  - ↳ The unit stores all the available FM radio stations and broadcasts the first station.

Store FM radio stations manually

1 Tune to an FM radio station.
2 Press **PROGRAM** to activate programming mode.
3 Press **PRESET +/-** repeatedly to select a preset number.
4 Press **PROGRAM** to confirm.
5 Repeat steps 1 - 4 to store more FM stations.

Tip

- At step 2, you can also press and hold preset key 1, 2 or 3 to save the current station to the corresponding position directly.
- To overwrite a preset station, store another station in its place.

Select a preset FM radio station

In FM tuner mode,

- to select a preset number 1 - 3, press the numeric key **1** - **3** directly;
- to select any preset number, press **PRESET +/-** repeatedly.

Use FM menu

1 In FM mode, press and hod **INFO/MENU** to access the FM menu.
2 Press **TUNING +/-** to scroll the menu options:
   - **[Scan setting]**
   - **[Stereo setting]**
   - **[System]**
3 To select an option, press **SCAN/SELECT**.
4 Repeat steps 2-3 if any sub-option is available under an option.

Scan setting

- **[Strong stations only]:** scan stations with strong signals only.
- **[All stations]:** scan all the available radio stations.

Show RDS information

RDS (Radio Data System) is a service that allows FM stations to show additional information.

If you listen to an FM station with RDS signal, a RDS icon and the station name are displayed.

1 Tune to a RDS station.
2 Press **INFO/MENU** repeatedly to scroll through the following information (if available):
   ↳ Radio test (No radio)
   ↳ PTY
   ↳ Station freq (No name)
   ↳ Stereo/MONO
   ↳ TIME
   ↳ DATE

Use system menu in FM/DAB mode

Reset all the settings

1 In DAB/FM mode, press and hold **INFO/MENU**.
2 Press **TUNING +/-** until **[System]** (system)is displayed.
3 Press **SCAN/SELECT** to confirm.
   ↳ **[Factory Reset]** (factory reset) is displayed.
4 Press **SCAN/SELECT** again.
   ↳ **[No] [Yes]** is displayed.
5 Press **TUNING +/-** to select **[Yes]** or **[No],** then press **SCAN/SELECT** to confirm.

- **[Yes]**: reset all the settings to factory default.
- **[No]**: cancel.

Know the software version

1 Enter the system setting menu.

2 Press **TUNING +/-** until **[SW version]** (Software version) is displayed.

3 Press **SCAN/SELECT** to confirm.

↳ The software version of the unit is displayed.

5 Product information

Note

- Product information is subject to change without prior notice.

Amplifier

Maximum Output Power	3 W
Frequency Response	40 - 20000 Hz, ±3dB

Tuner

Tuning Range	FM: 87.5 - 108MHz
Tuning grid (FM)	50 KHz
Sensitivity	
- Mono, 26dB S/N Ratio	< 22dBf
- Stereo, 46dB S/N Ratio	< 43dBf
Search Selectivity	< 28dBf
Total Harmonic Distortion	< 2%
Signal to Noise Ratio	> 55 dB
DAB	
Frequency Range	Band III (174~240MHz)

Speakers

Speaker Impedance	4 ohm
Speaker Driver	3 inch full range
Sensitivity	86 ± 3dB/m/W

General information

AC/DC adapter	(Input)	100-240V~, 50/60 Hz
	(Output)	DC 5.5V ⎓ 1.0A
	(Brand name)	Philips
	(Model number)	TPA107B-55055-EU(F)
Operation Power Consumption		1.85 W
Dimensions		
- Main Unit (W x H x D)		211.2 x 155 x 147.8 mm
Weight		
- Main Unit		1.04 kg

6 Troubleshooting

Warning

- Never remove the casing of this apparatus.

To keep the warranty valid, never try to repair the system yourself.

If you encounter problems when using this apparatus, check the following points before requesting service. If the problem remains unsolved, go to the Philips web site (www.philips.com/welcome). When you contact Philips, ensure that the apparatus is nearby and the model number and serial number are available.

No power

- Ensure that the power plug is connected properly.
- Ensure that there is power at the AC Mains.
- Ensure that the batteries are inserted correctly.
- If a 'Low Battery' message appears on the screen, replace the batteries or use the AC power instead.

No sound

- Adjust the volume.

No response from the unit

- Take out the batteries and turn on the unit again.
- Disconnect and reconnect the AC power plug, then turn on the unit again.

Poor radio reception

- Increase the distance between the unit and your TV or VCR.
- Fully extend the antenna.

2015 © WOOX Innovations Limited.
All rights reserved.
This product was brought to the market by WOOX Innovations Limited or one of its affiliates, further referred to in this document as WOOX Innovations, and is the manufacturer of the product. WOOX Innovations is the warrantor in relation to the product with which this booklet was packaged. Philips and the Philips Shield Emblem are registered trademarks of Koninklijke Philips N.V.

AE5020_12_User Manual_V2.0